FIRST ANGLE PROJECTION

(ALL DIMENSIONS ARE IN mm)

C.C.S.

DRG. NO. 1-61-000-00363

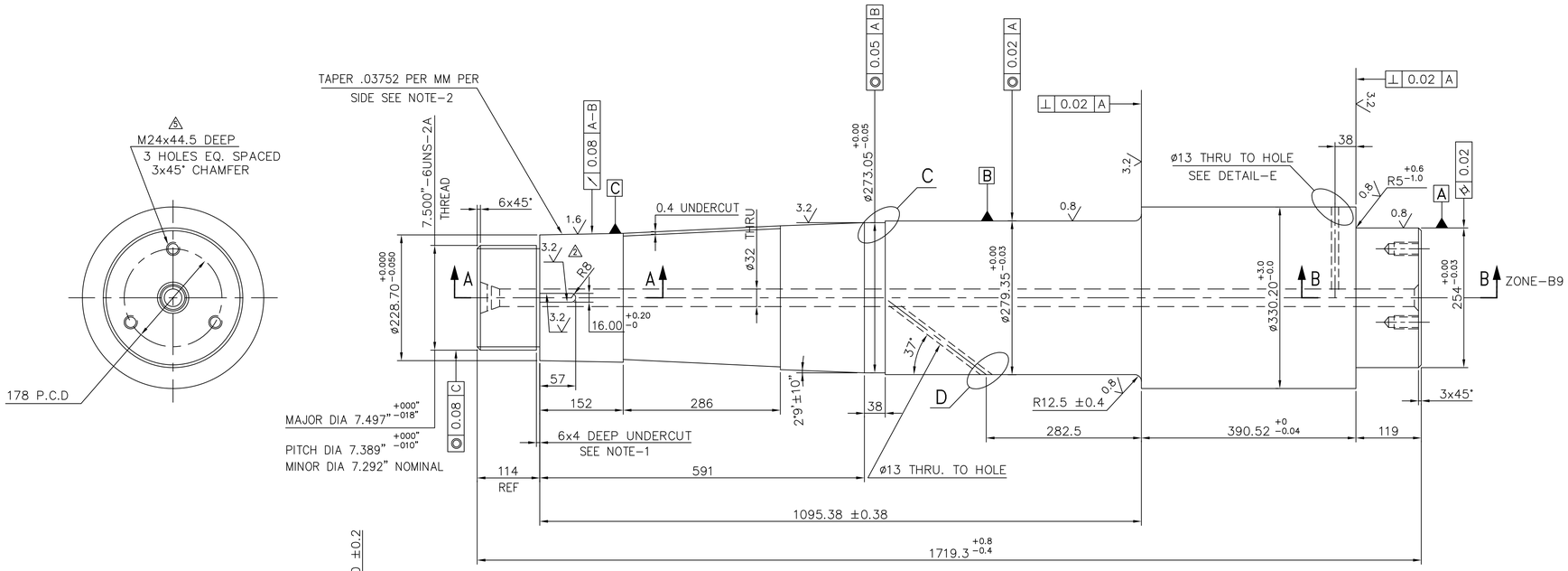

NOTES:-

1. BREAK ALL SHARP EDGES AND CORNERS UNLESS OTHERWISE NOTED.
2. SUPPLY AS PER CUSTOMERS APPROVED QUALITY PLAN
3. ATTEST MATERIAL.

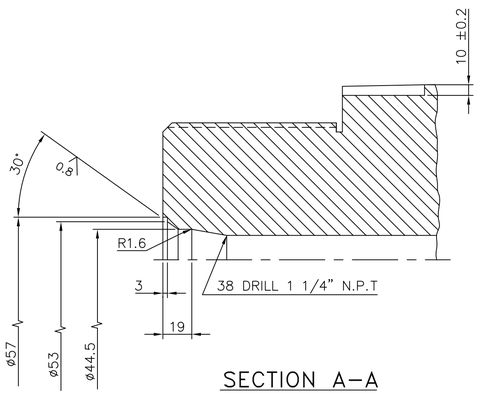

SECTION A-A

SCALE-1:2

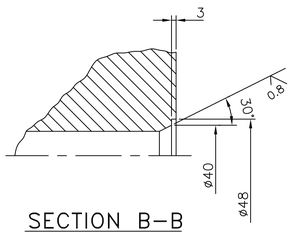

SECTION B-B

SCALE-1:2

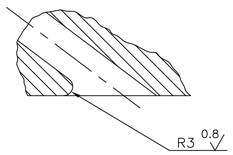

DETAIL-D

SCALE-1:1

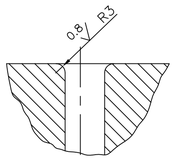

DETAIL-E

SCALE-1:1

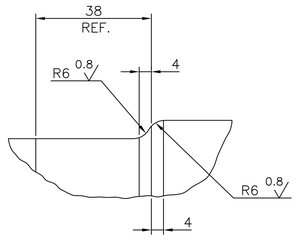

DETAIL-C

SCALE-1:1

ITEM NO	DESCRIPTION	DRAWING NO.	VAR. NO.	RAW MATERIAL SIZE OR CASTING DRG.NO. OR FORGING DRG.NO.	MATERIAL CODE / MATERIAL SPECN.	NET WT.	GROSS WT. / QUANTITY
	FORGING			3-61-000-90173	BA9413253137	790	036
					AA19332		

THE FOLLOWING CONDITIONS APPLY EXCEPT OTHERWISE STATED...

1. REF.TO HY0230261 FOR UNSPECIFIED TOLERANCES.
2. CHAMFER M/CD SHARP EDGES 1.2 TO 1.0 AT 45°.
3. INTERNAL M/CD CORNER RADII 1 TO 0.7.
4. THE SURFACE ROUGHNESS WHEREVER NOT SHOWN SHALL BE TAKEN FROM THE SURFACE ROUGHNESS SHOWN OUT SIDE BACK SLASHES GIVEN AT THE TOP MOST RIGHT CORNER OF THE DRG.

TYPE OF PRODUCT OR NAME OF CUSTOMER/PROJECT: 1003 XRP BOWL MILL

BHARAT HEAVY ELECTRICALS LTD. HYDERABAD

	NAME	SIGN.	DATE
DRN.	N.D.S		15.4.99
CHD.	S.G		15.4.99
APPD.	K.M.RAO		15.4.99

NO.OF VAR.

DEPT.	SCALE	WEIGHT (KG)	REF. TO ASSY DRG.	ITEM NO.	NO.OF ITEMS
PULV. ENGG CODE 446	1:5	790.036	C-101-01082/R1 CE-P/N-101-01082		

TITLE: JOURNAL SHAFT

DRAWING NO. 1-61-000-00363 REV. 07

SHEET NO. NO OF SHEETS

REV.	DATE	ALTERED / CHECKED / APPD.	ZONE	
07	02.07.03		ZONE	2 DEG 9' ± 10" WAS 2 DEG 9' (REF) SLOT FOR BEARING REMOVAL DELETED BASED ON SHOP FEEDBACK. TOL ON ø279.35 & 254 WAS +0.0/-0.02. NOTES 1-4,6&8 DELETED,RENUMBERED.
06	23.01.99		ZONE	DRG. REVISED ON AUTOCAD
05	11.02.92		ZONE G-11	M24 WAS 1"-8UNC-2 TAP
04	08.08.91		ZONE E-3	U.T. CAT-III WAS CAT-IV NOTE 8 ADDED
03	07.01.91		ZONE	CE MATERIAL SPEC. DELETED
02	20.05.88		ZONE	KEY WAY MACHINING CORRECTED IN DET 'F' SLOT LENGTH INCLUDES MILLING CUTTER RELIEF
01	21.08.87		ZONE	DETAIL-F ADDED SHOWING SLOTS FOR BEARING REMOVAL

THE INFORMATION ON THIS DOCUMENT IS THE PROPERTY OF BHARAT HEAVY ELECTRICALS LIMITED.
IT MUST NOT BE USED DIRECTLY OR INDIRECTLY IN ANY WAY DETRIMENTAL TO THE INTEREST OF THE COMPANY

COMPUTER FILE NAME : 16100363.DWG

INVENTORY NO | SIGN. AND DATE | REF. DRG. NO.